Flex Fuel Polygeneration: Optimizing Cost, Sustainability, and Resiliency

Matthew Kieffer, Tristan Brown, Robert Brown

Analyzing New Energy Investment Portfolios

- **Program Objective**
  - Analyze new energy and transportation investment portfolios
  - Become more sustainable
- **Resilient energy production facilities**
  - Capacity of the system to function while incurring contingencies
- **Flexibility**
  - Location
  - Energy sources
  - Energy carriers

Initial Analysis of FFPG Systems

- Design power plants that are resilient to environmental and economic shocks
- Utilize multiple inputs, create multiple outputs
- Design a system to perform high level techno-economic analysis (TEA)
- Determine economic feasibility of each plant

Level of Uncertainty of this Project

Estimation Type	Accuracy Range
Detailed	-5% to +10%
Definitive	-1% to +20%
Preliminary	-20% to +25%
Study	-25% to +30%
Order of Magnitude	-30 to +50%

(Couper 2003)

- Study Estimate
  - Intended to serve as a cost indicator at an early stage of the project
  - Utilize detailed process models and data available in literature
  - Level of accuracy ± 30%

Conventional Approaches to Energy Conversion

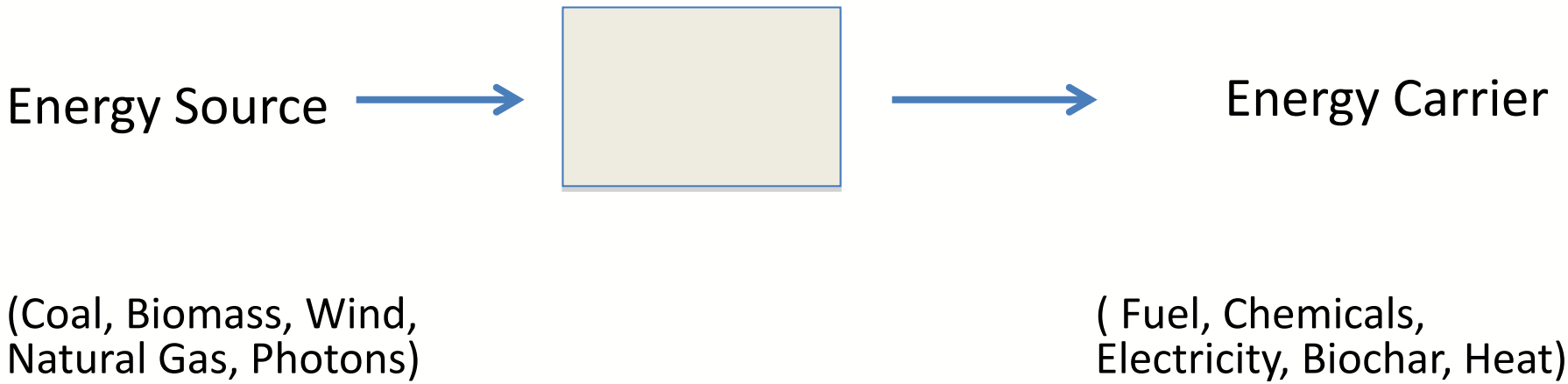

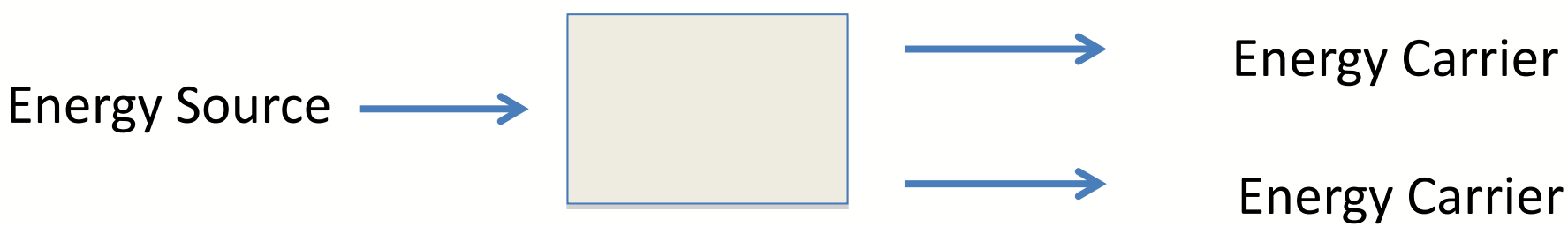

The Effect of Extreme Events on Energy Production

Both renewable and fossil fuel feedstock are vulnerable to contingencies

- Availability
  - Water supply and temperature, wind patterns and intensity, solar radiation
- Transportation
  - Pipelines, railways, highways
- Market demand
  - Fluctuations in the electricity and fuel sectors

Recent Effects of Drought on Ethanol Production

U.S. Crop Report May-August 2012
(percent of total crop by condition)

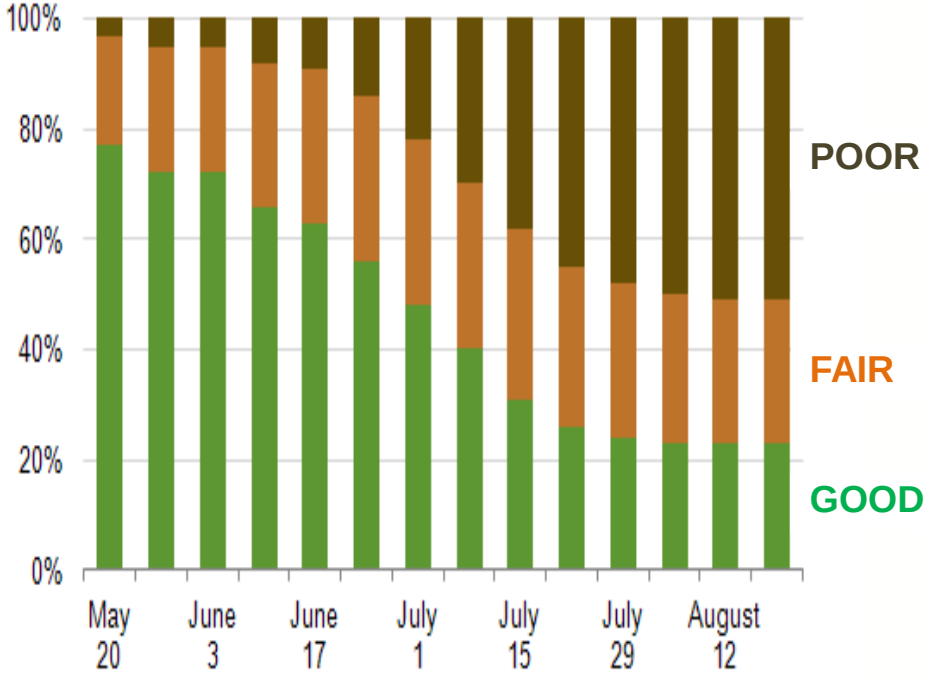

(EIA 2012)

U.S. Production of Fuel Ethanol
(thousand barrels per day)

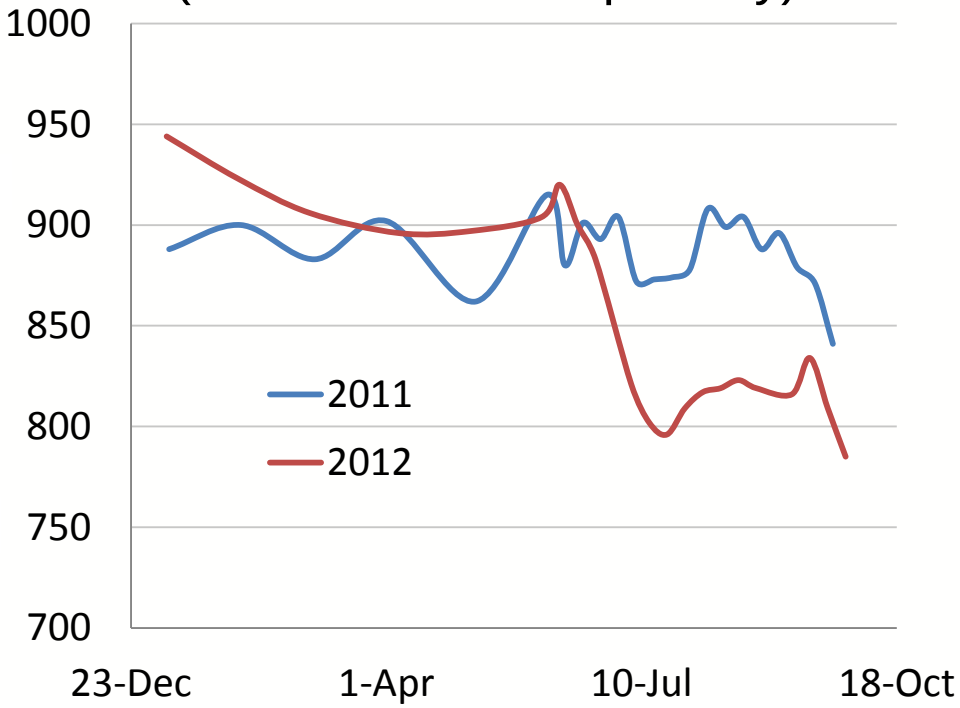

(EIA 2012)

Possible Effects of Hurricanes on Fuel Production

Hurricane Isaac

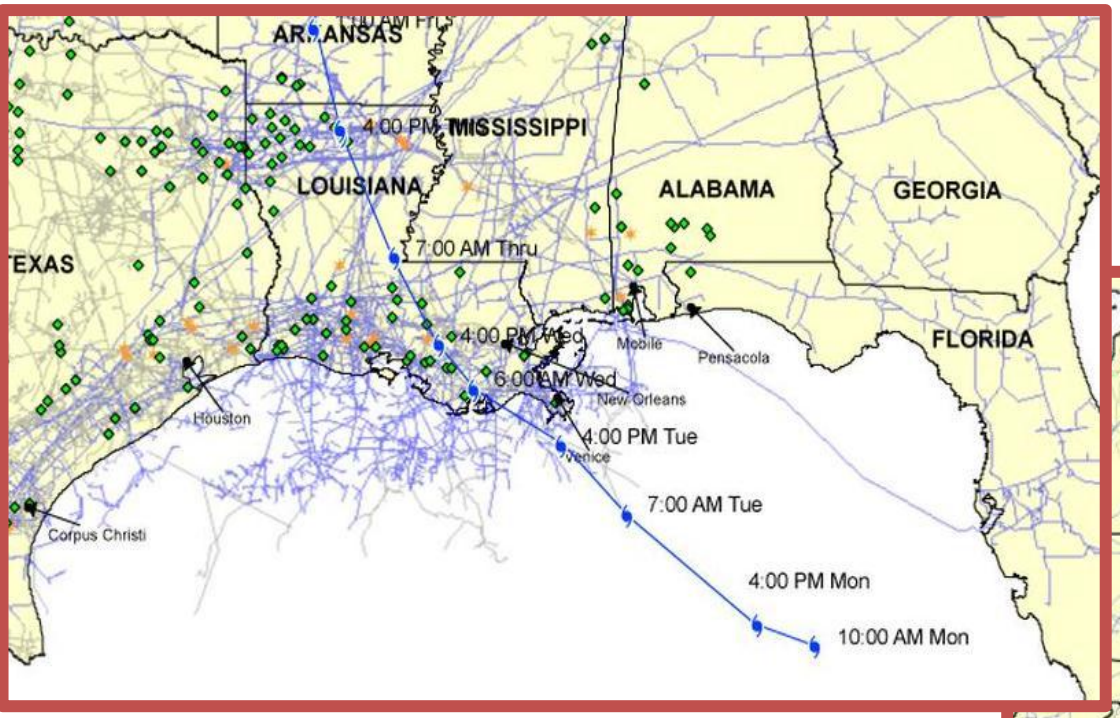

Hurricane Sandy

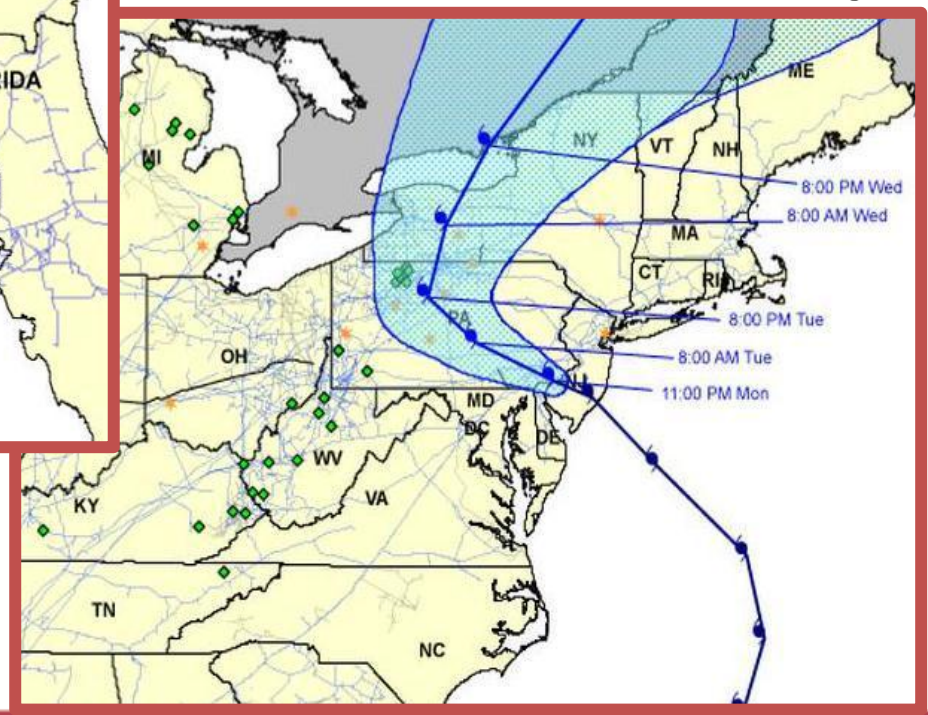

(EIA 2012)

Proposed Flex Fuel Polygeneration

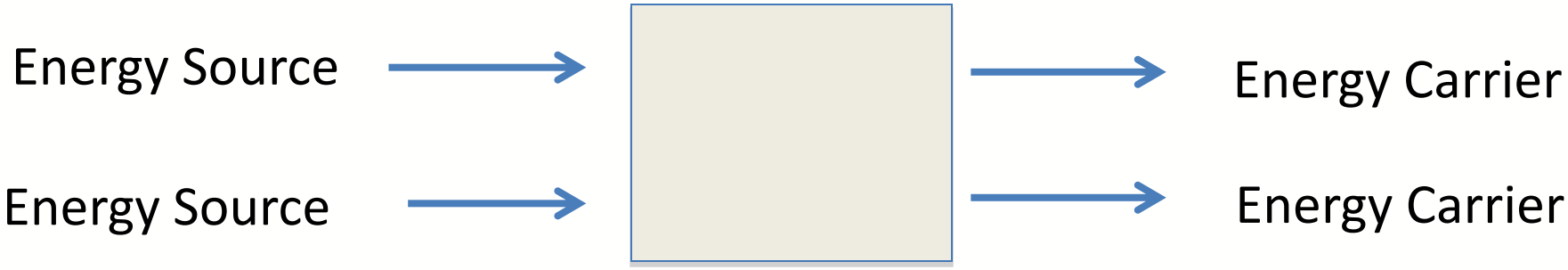

(Coal, Biomass, Wind, Natural Gas, Photons)

(Fuel, Chemicals, Electricity, Biochar, Heat)

Challenges Faced when Considering FFPG

- Technology Down Selection
  - Development of technology, profitability, costs involved, outlook
- Feedstock Cost/Availability
  - Location, size of plant, transportation
- Market Demand
  - Products compatible with infrastructure, demands
- GHG Emissions

Nuclear
Gasification
Pyrolysis
Fuel cell
Solar photovoltaic
Solar thermal
Geothermal
Wind power
Tidal power
NG or coal CC
Hydroelectric

Advantages of Flex Fuel Polygeneration

- A study by He et al. has shown that multiple input multiple output systems can save costs and energy
  - Higher energy utilization
  - Capital savings by joint usage
  - Waste emissions savings

(He 2012)

- FFPG can also…
  - take advantage of market changes in primary energy costs
  - take advantage of market changes in price of energy carriers
  - improve environmental performance of power plants
    - (including carbon negative energy)

Reasons for Focusing on Chosen Systems

- Abundance and price of natural gas
- Lower capital costs associated with natural gas energy production
- NG distribution infrastructure is developed
- Fischer Tropsch (FT) synthesis has been proven at commercial scale for a long time (Espinoza 1999)

Potential Technologies	Electricity Generation Capital Costs ($/kW)
Onshore Wind	$2090
Power from Biomass	$2620
Fuel Cell	$5800
Natural Gas CC	$920
Nuclear	$3040
Solar Photovoltaic	$5200
Hydropower	$2040
Coal	$1920

(U.S. DOE 2012)

Schematics of Methane Refinery

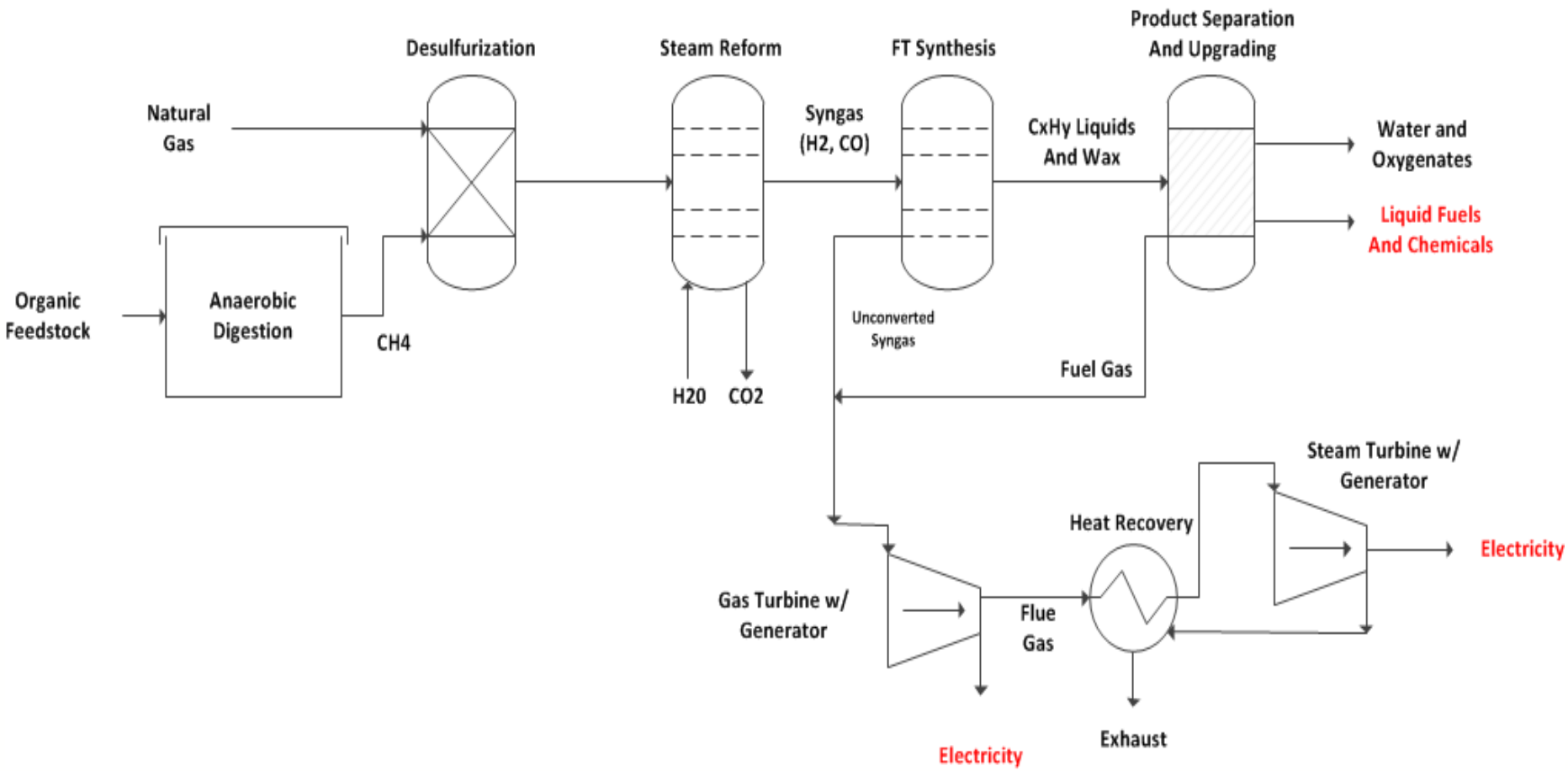

Adapted from (Swanson 2010) and (Brown 2003)

Methane Refinery Sensitivity Analysis

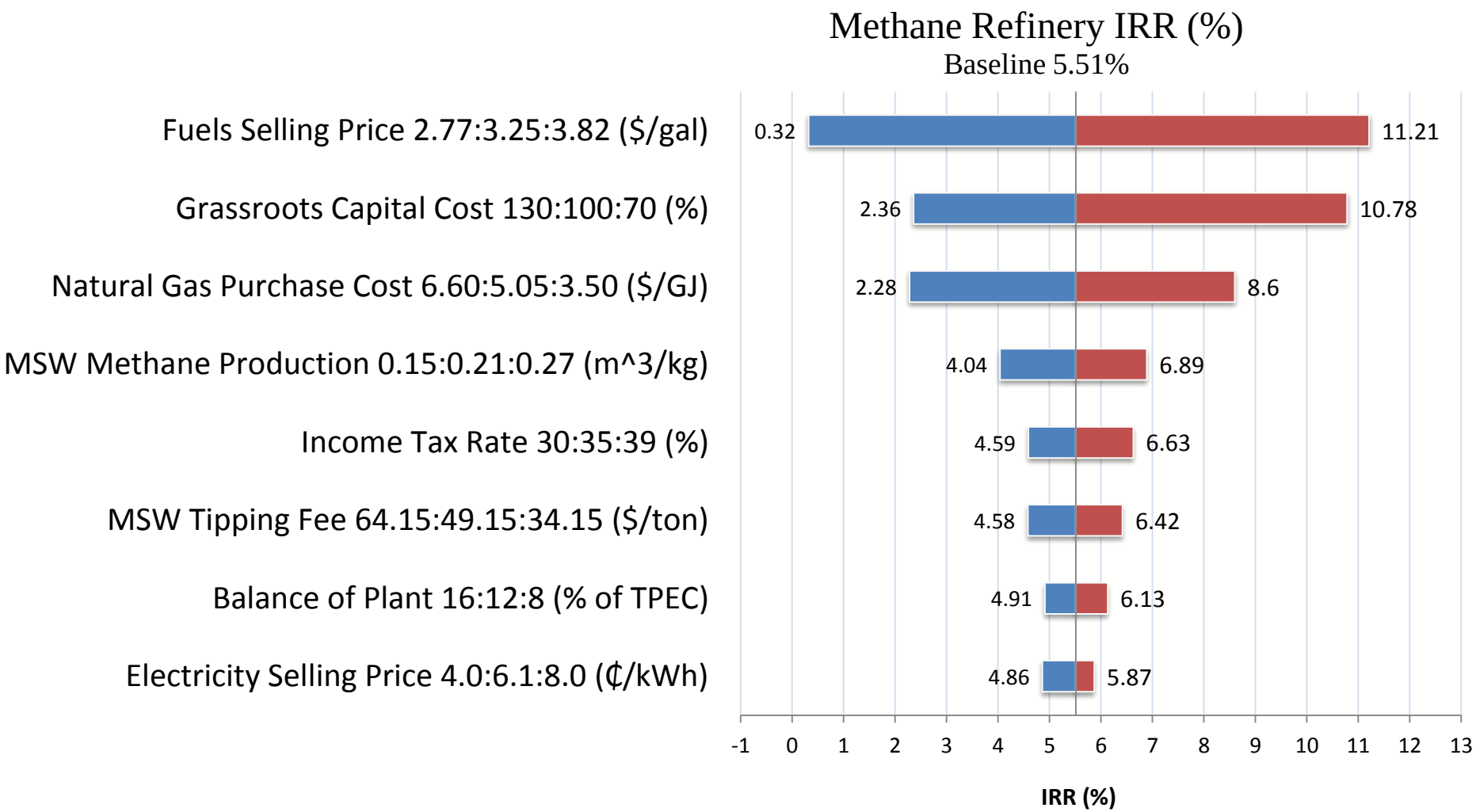

Schematics of Methane/Wind Refinery

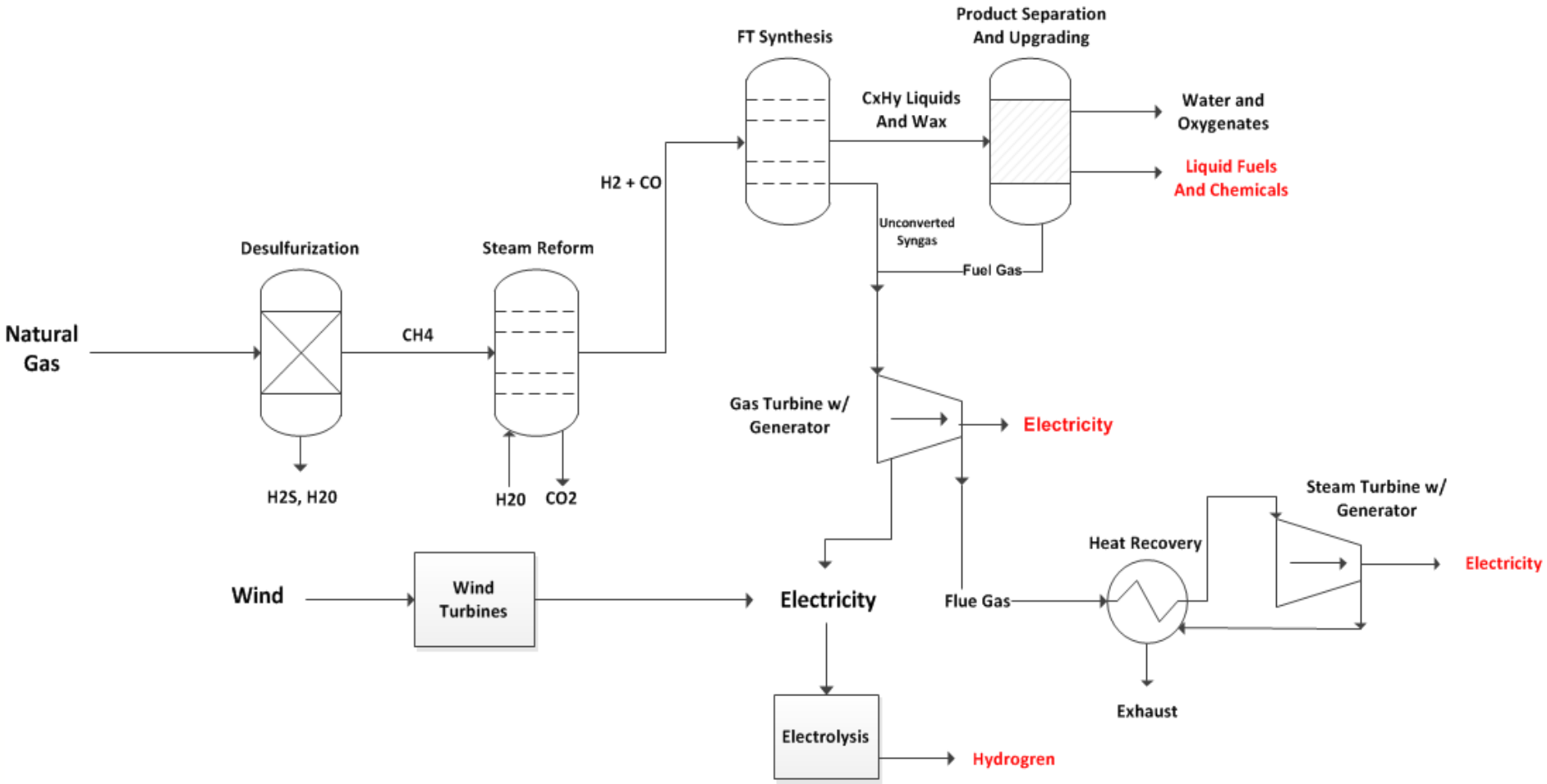

Adapted from (Swanson 2010) and (Brown 2003)

Methane/Wind Refinery Sensitivity Analysis

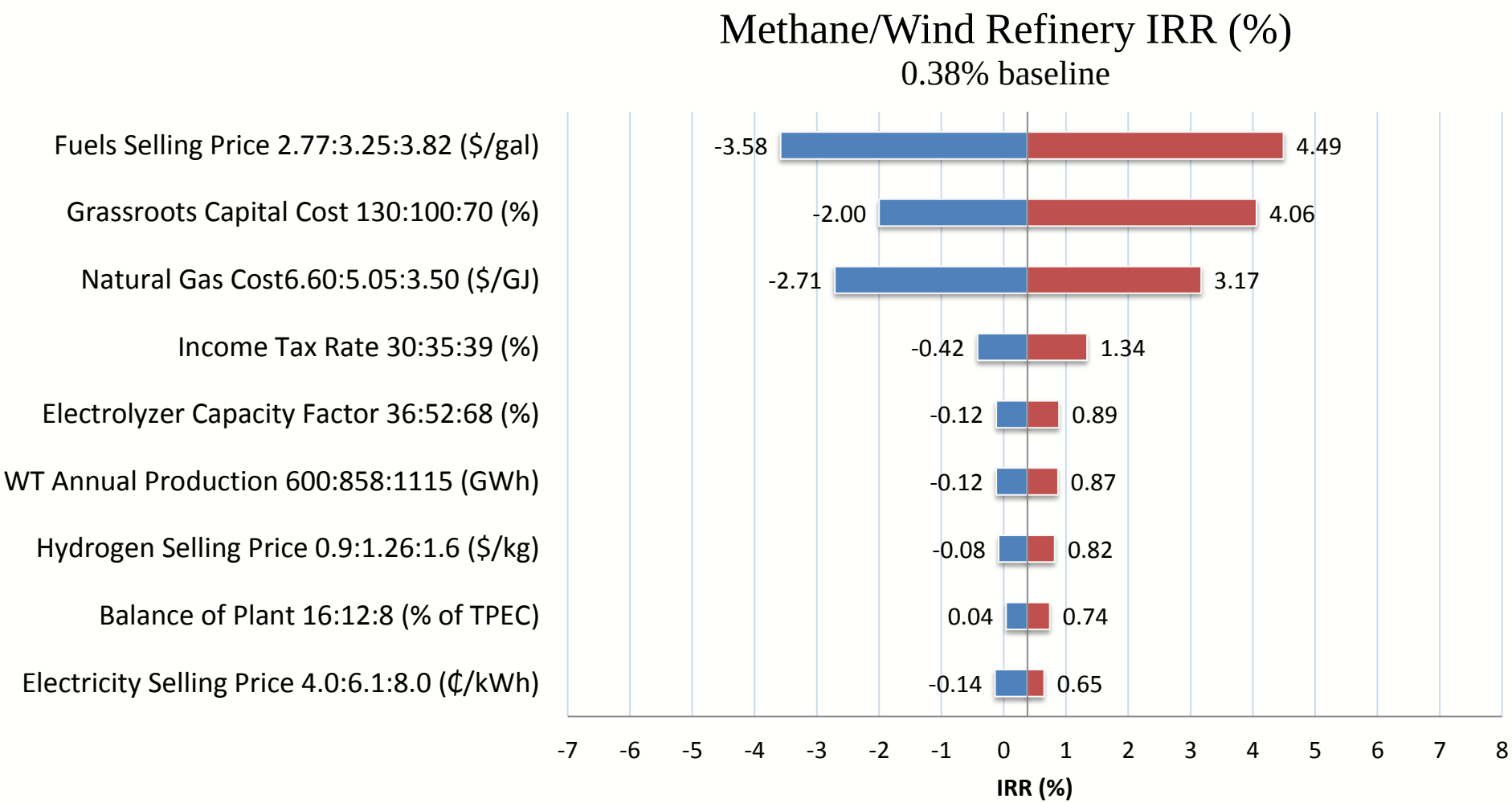

The Role of Feedstock Costs in Plant Economics

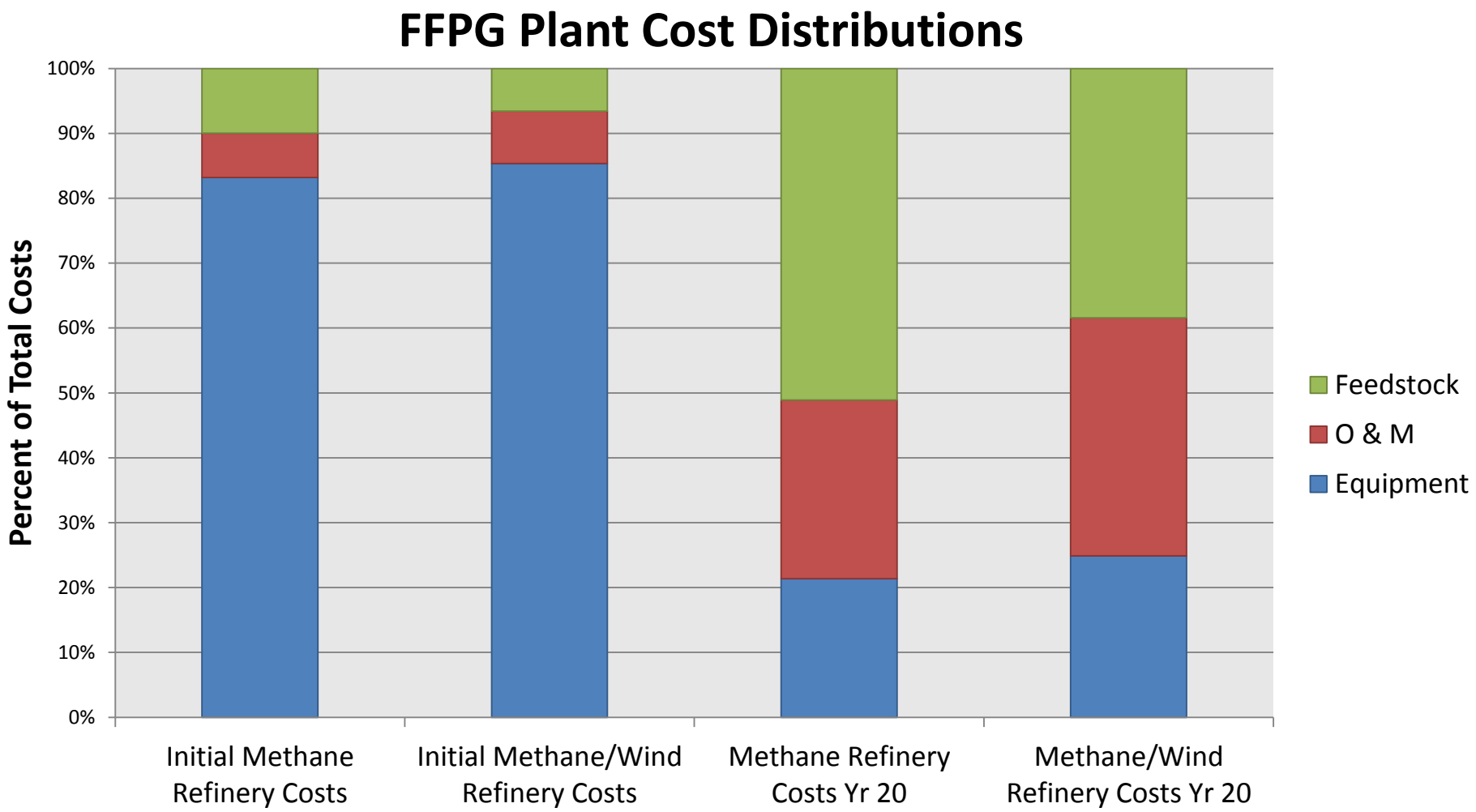

Concluding Remarks

- Feedstock prices play a large role in plant economics
- Price and availability of feedstock are vulnerable to contingencies
- FFPG plants have the ability to adjust to feedstock prices, product prices, and can improve plant efficiency

Acknowledgements

- National Science Foundation for sponsorship of this study
- CSET Staff – Ryan Smith
- Collaboration with Professors Guiping Hu, Mark Wright, and James McCalley
- Fellow graduate students a CSET

References

- U.S. Department of Energy, N. R. E. L. (2012). Overnight Capital Costs.
- Brown, R. C. (2003). Biorenewable Resources: Engineering New Products from Agriculture. Ames, Blackwell Publishers. Swanson, R. M., A. Platon, et al. (2010). Techno-Economic Analysis of Biofuels Production Based on Gasification**:** Medium: ED; Size: 165 pp.
- EIA (2012). Annual Energy Outlook 2012 with Projections to 2035. Washington, DC, Energy Information Administration.
- EIA (2012). Weekly Ethanol Plant Production. U. S. DOE. Washington, DC, Energy Information Administration
- EIA (2012) Drought has significant effect on corn crop condition. Washington, DC, Energy Information Administration.
- He, C. and X. Feng (2012). "Evaluation indicators for energy-chemical systems with multi-feed and multi-product." Energy **43**(1): 344-354.
- Couper, J. R. (2003). Estimation of Capital Requirements. Process Engineering Economics, Marcel Dekker.
- Espinoza, R.; Steynberg, A.; Jager, B.; Vosloo, A. “Low Temperature Fischer-Tropsch Synthesis from a Sasol Perspective.” *Applied Catalysis A: General*; Vol. 186(1), 1999; pp. 13-26.