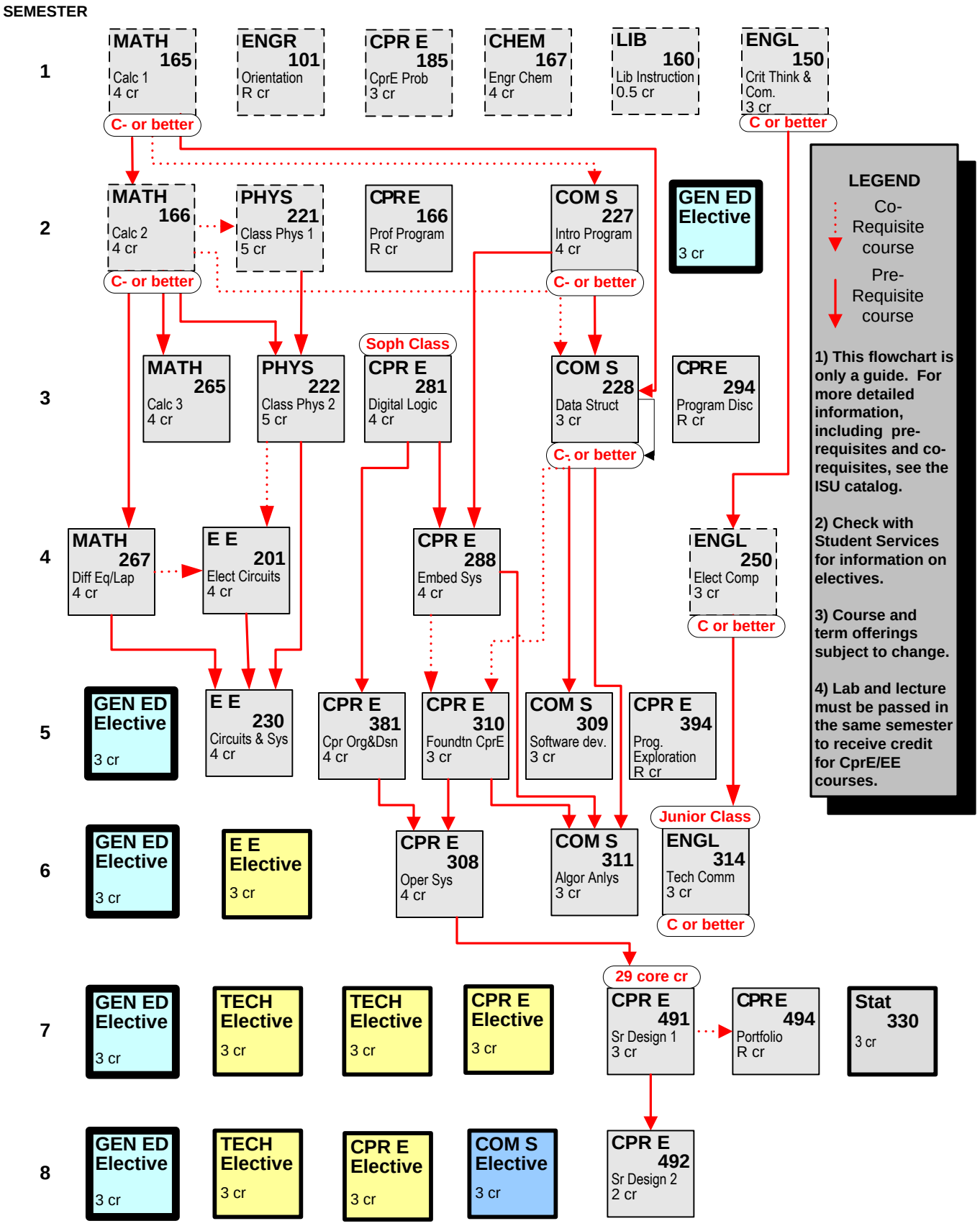COMPUTER ENGINEERING FLOWCHART, 2009-2011 CATALOG (126.5 credits)